SURVEY IN LOT 7
TOWN OF BELMONT
SW 1/4, SEC 34
T 3 N, R 10 E, WM
HOOD RIVER CO., ORE

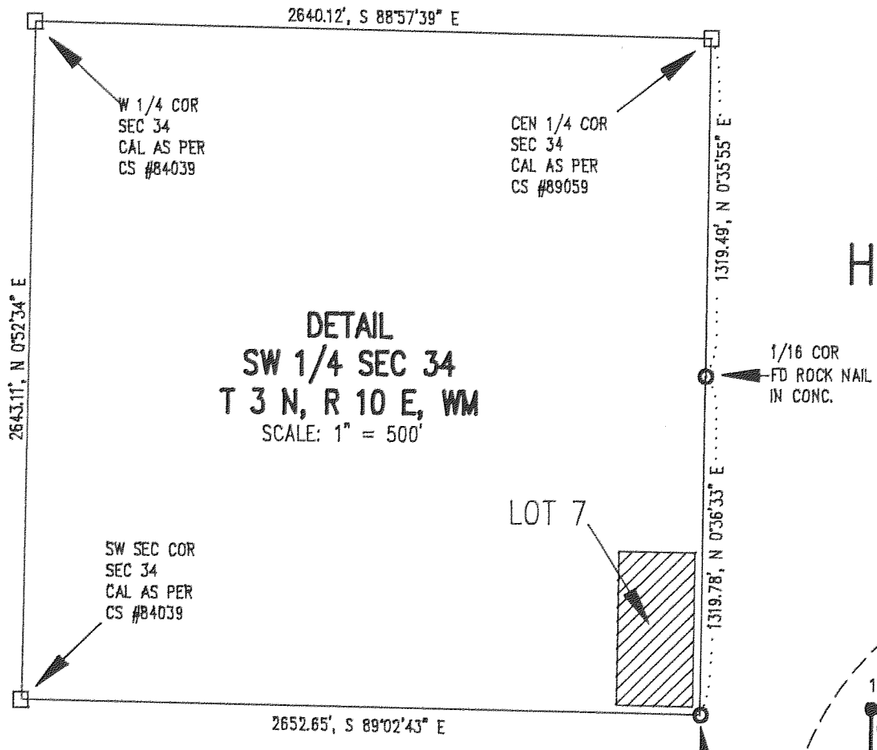

BASIS OF BEARING
CS #89059

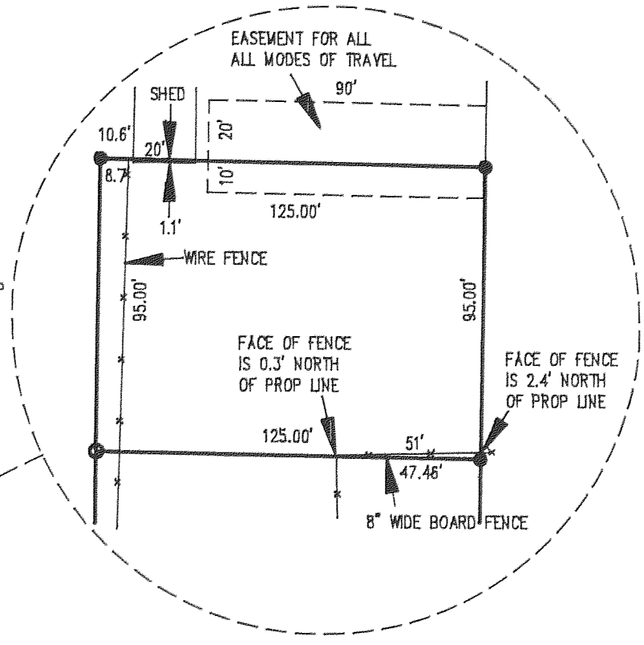

DETAIL
NO SCALE

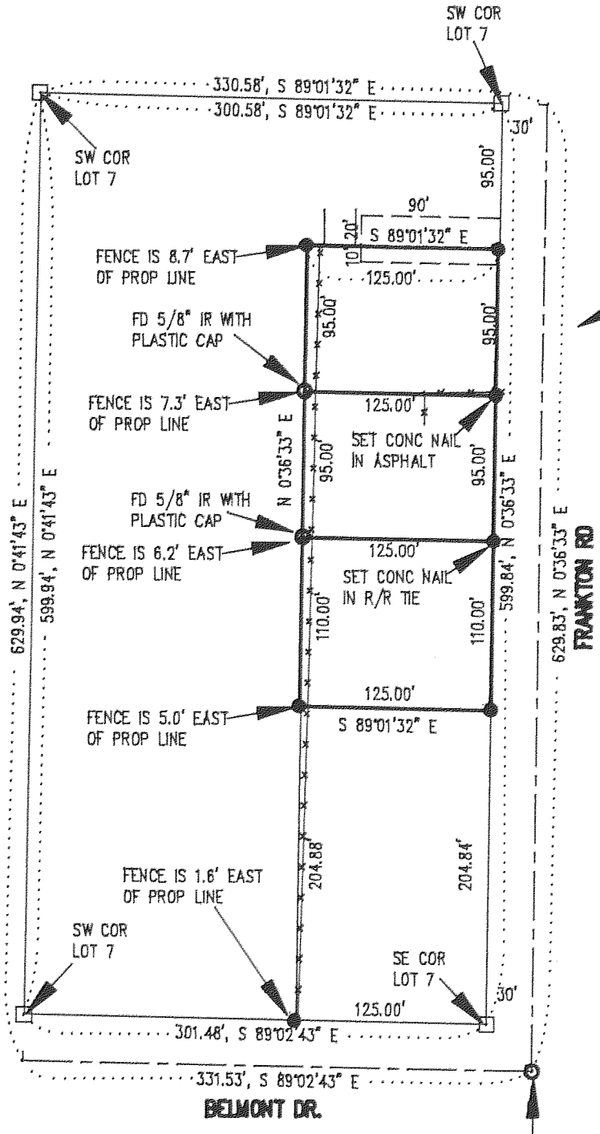

DETAIL
LOT 7
TOWN OF BELMONT
SCALE: 1" = 100'

NARRATIVE OF SURVEY

THE PURPOSE OF THE SURVEY WAS TO ESTABLISH THE BOUNDARYS OF THREE PARCELS IN LOT 7 OF THE TOWN OF BELMONT. TWO SURVEYS BY DLC SURVEYING (CS #84039 AND CS #89059) WERE USED AS REFERENCE AND BASIS OF BEARING. A WIRE FENCE ON THE WEST BOUNDARY OF THE PARCELS ENCROACHED AS SHOWN. ALSO THE DETAIL SHOWS OTHER ENCROACHMENTS THAT THE SURVEY FOUND. ALL MONUMENTS FOUND AND SET DURING THE COURSE OF THIS SURVEY ALONG WITH MEASURED AND CALCULATED BEARINGS AND DISTANCES ARE SHOWN HEREIN.

AT THE REQUEST OF SUE HALL I SET AN ADDITIONAL MONUMENT AT THE INTERSECTION OF THE WEST LINE OF THE PARCELS WITH THE NORTH LINE OF BELMONT ROAD.

LEGEND

- ○ = FD MONUMENT AS NOTED
- ● = SET 1/2" IR WITH PLASTIC CAP, EXCEPT AS NOTED MARKED OR 932 & WA 22098
- □ = CALCULATED COR AS PER CS #84039
- = FENCE LINE

SURVEY FOR
SUSAN HULL & JOEL HARMAN

FILED
JUL 12, 1990
Richard G. Arnold
COUNTY SURVEYOR
DEPUTY

REGISTERED
PROFESSIONAL
LAND SURVEYOR
OREGON
JULY 17, 1970
ANTHONY C. KLEIN
932

Klein & Assoc.
LAND SURVEYING
1109 Country Club Road
Hood River, Oregon 97031
Tele: (503)386-3322

DATE SURVEYED: JULY 1990
JOB NO.: 90023

3N 10 34C
CS# 90054